Jib arm Type A
Loading bundles 3.2m and 2.2m lengh

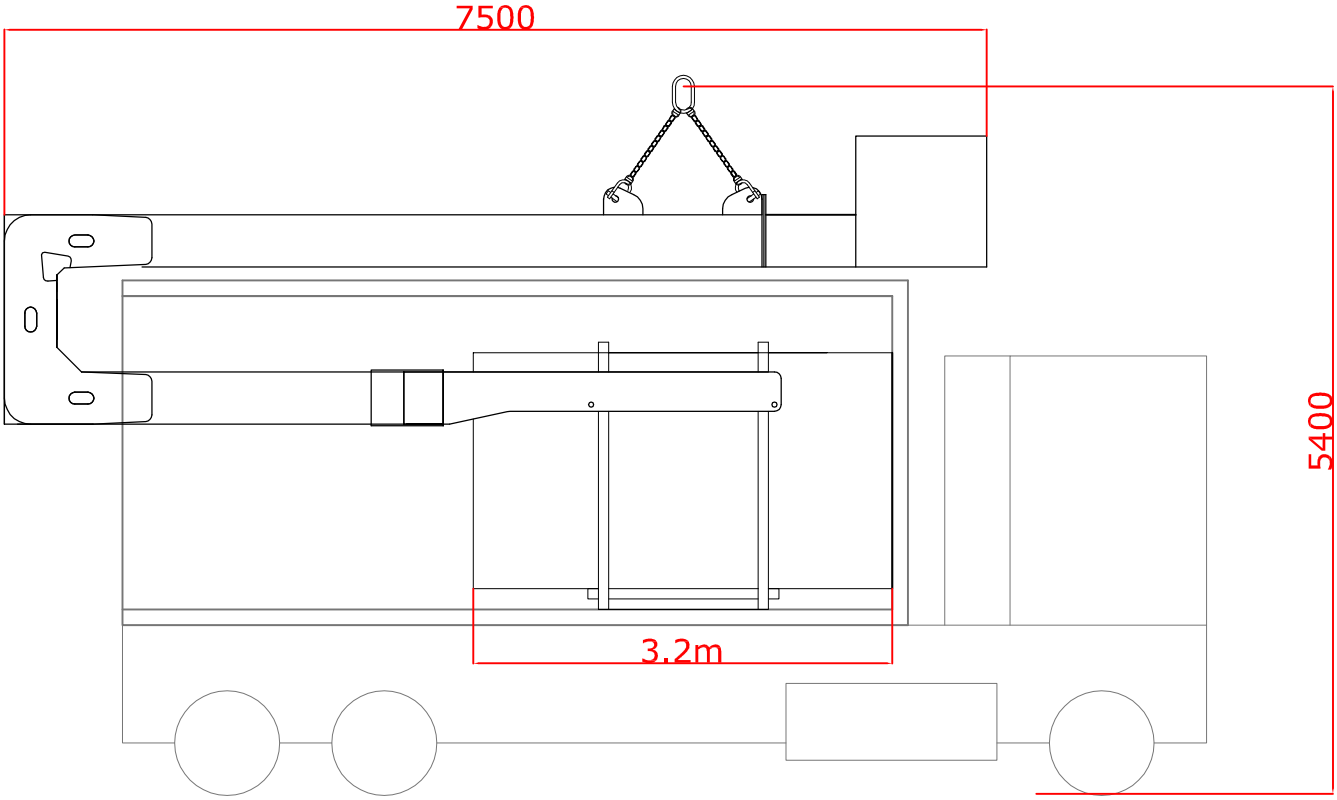

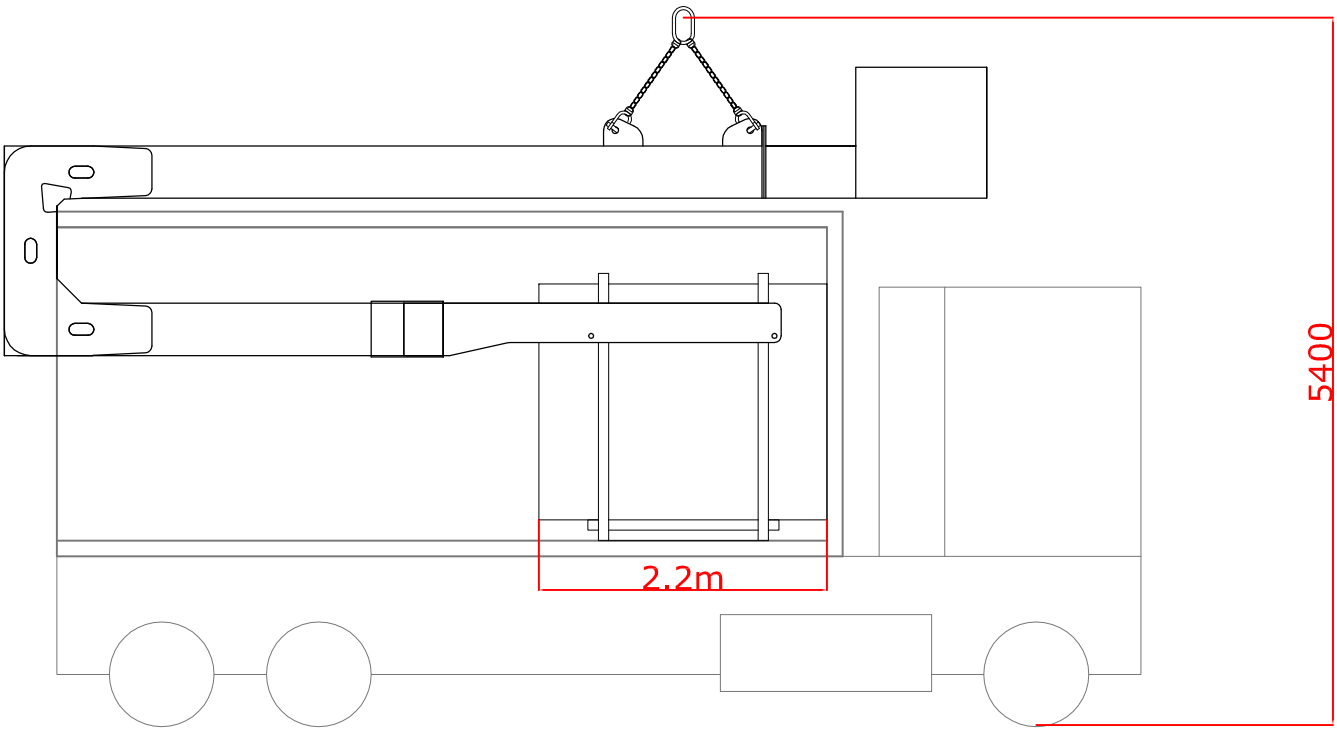

HERSEN